Amino Acids, it's in the bag:
A contamination study using LC-FD/ToF-MS

Ariel Lewis
Eckerd College
August 6, 2008
Mentor: Jason Dworkin

ANSMET

- Searches for meteorites in Antarctica
- Meteorites are collected and placed in bags

ANSMET Results

- Resultant large peak when hydrolyzed

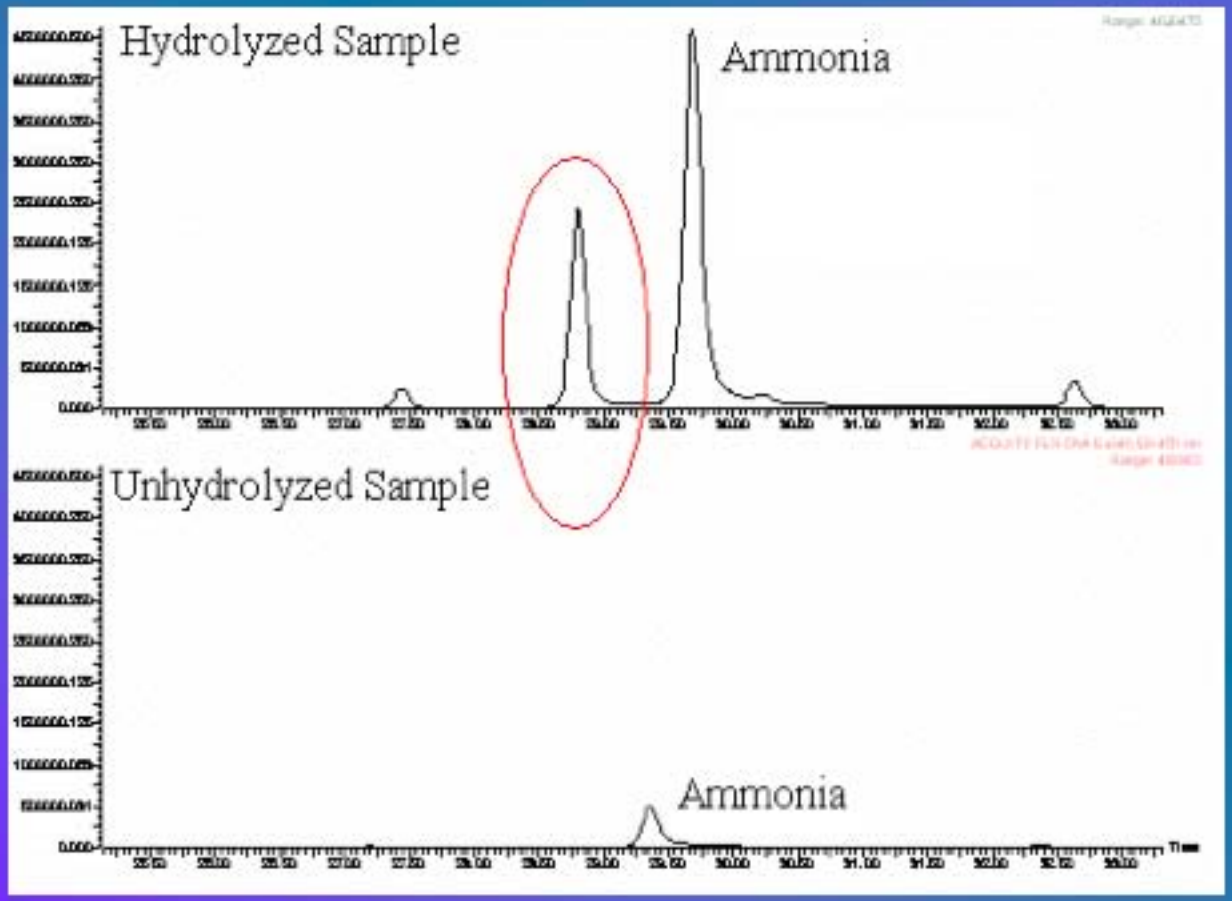

Mystery Peak

- ε-amino-*n*-caproic acid (EACA)
- Product of hydrolyzation of Nylon-6
- Preventable contamination from bags

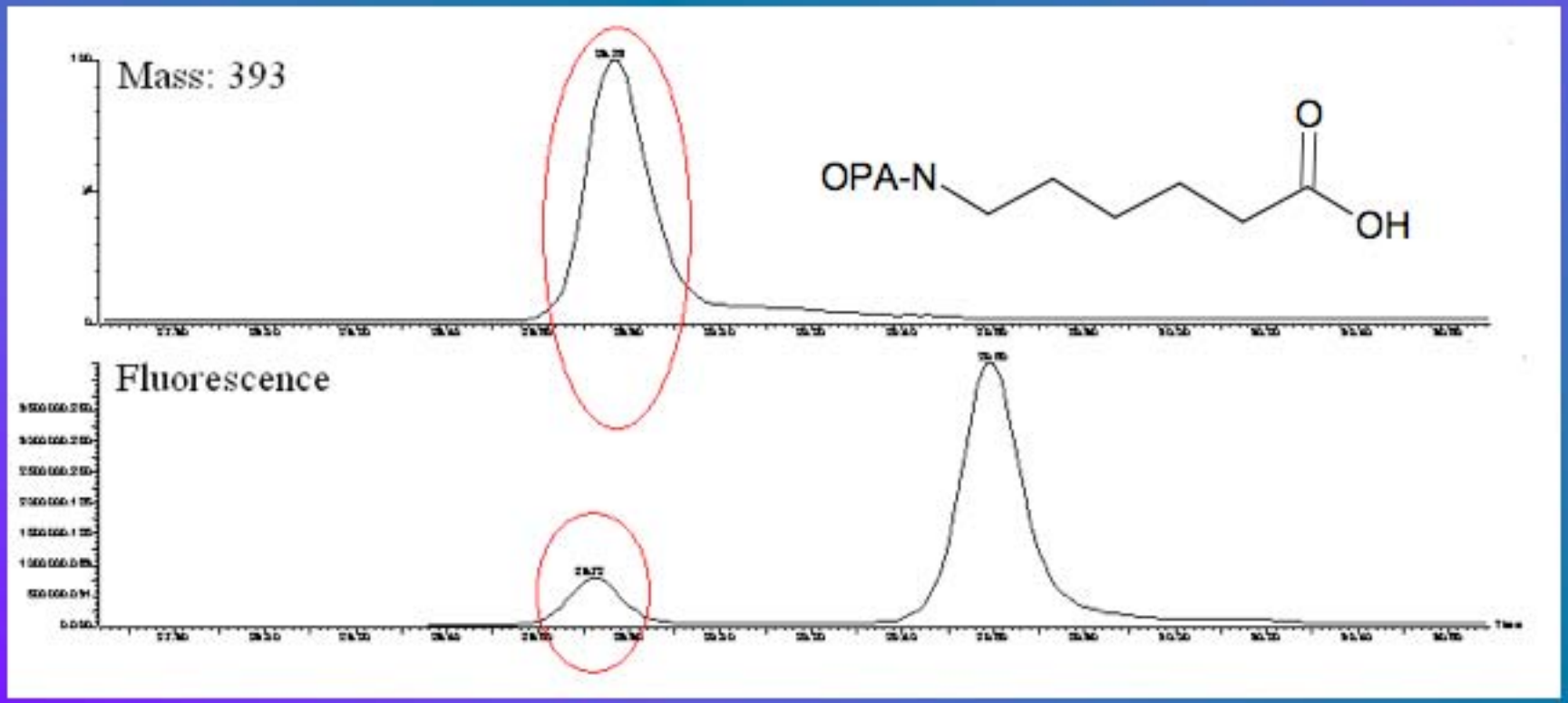

Amino Acids

- Twenty coded or proteinaceous amino acids
- Proteinaceous amino acids exist nearly exclusively in L chirality
- Amino acids of interest in the search for the origin of life

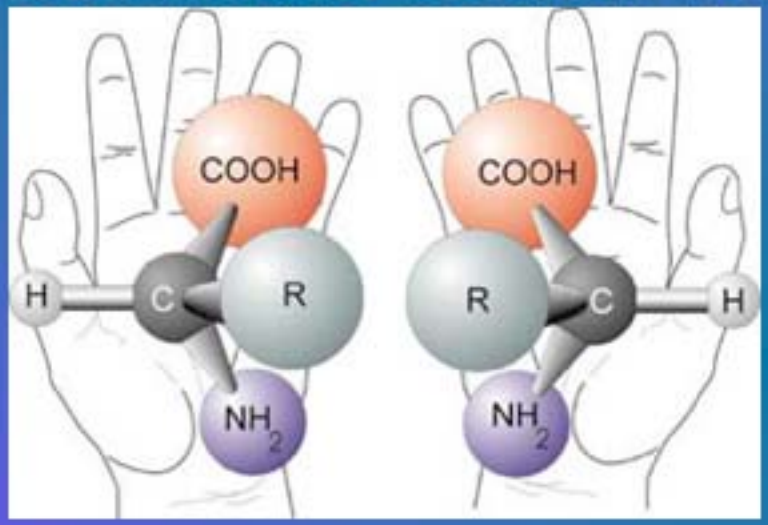

LC-FD/ToF-MS

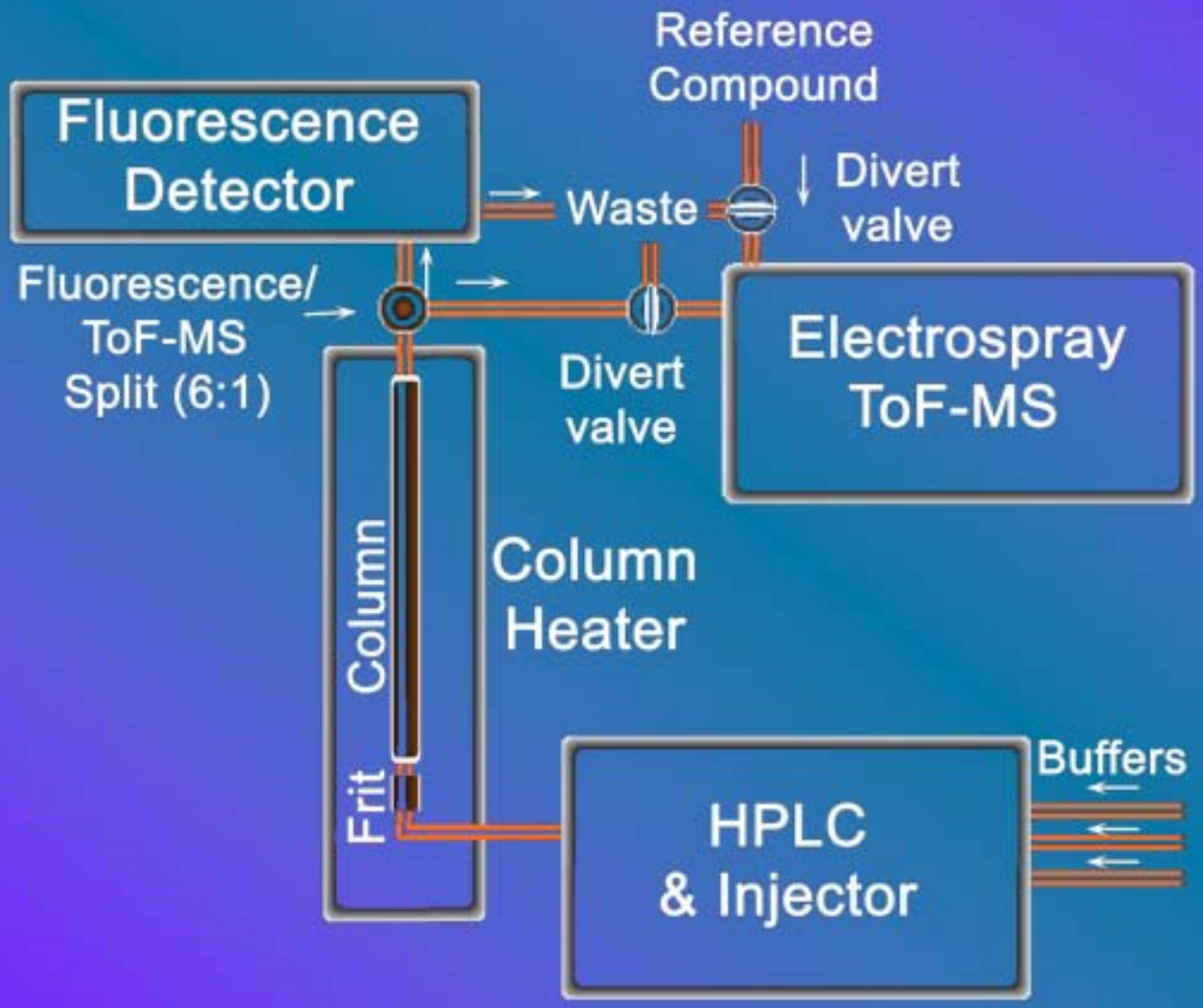
Reference
Compound
Fluorescence
Detector
Waste
Divert
valve
Fluorescence/
ToF-MS
Split (6:1)
Divert
valve
Electrospray
ToF-MS
Column
Column
Heater
Frit
Buffers
HPLC
& Injector

Experimental Methods

- Clean water samples in bags for 24 hours
- Extracted and split sample
- Half sample acid hydrolyzed half not
- Resultant samples analyzed with LC-FD/ToF-MS

Results

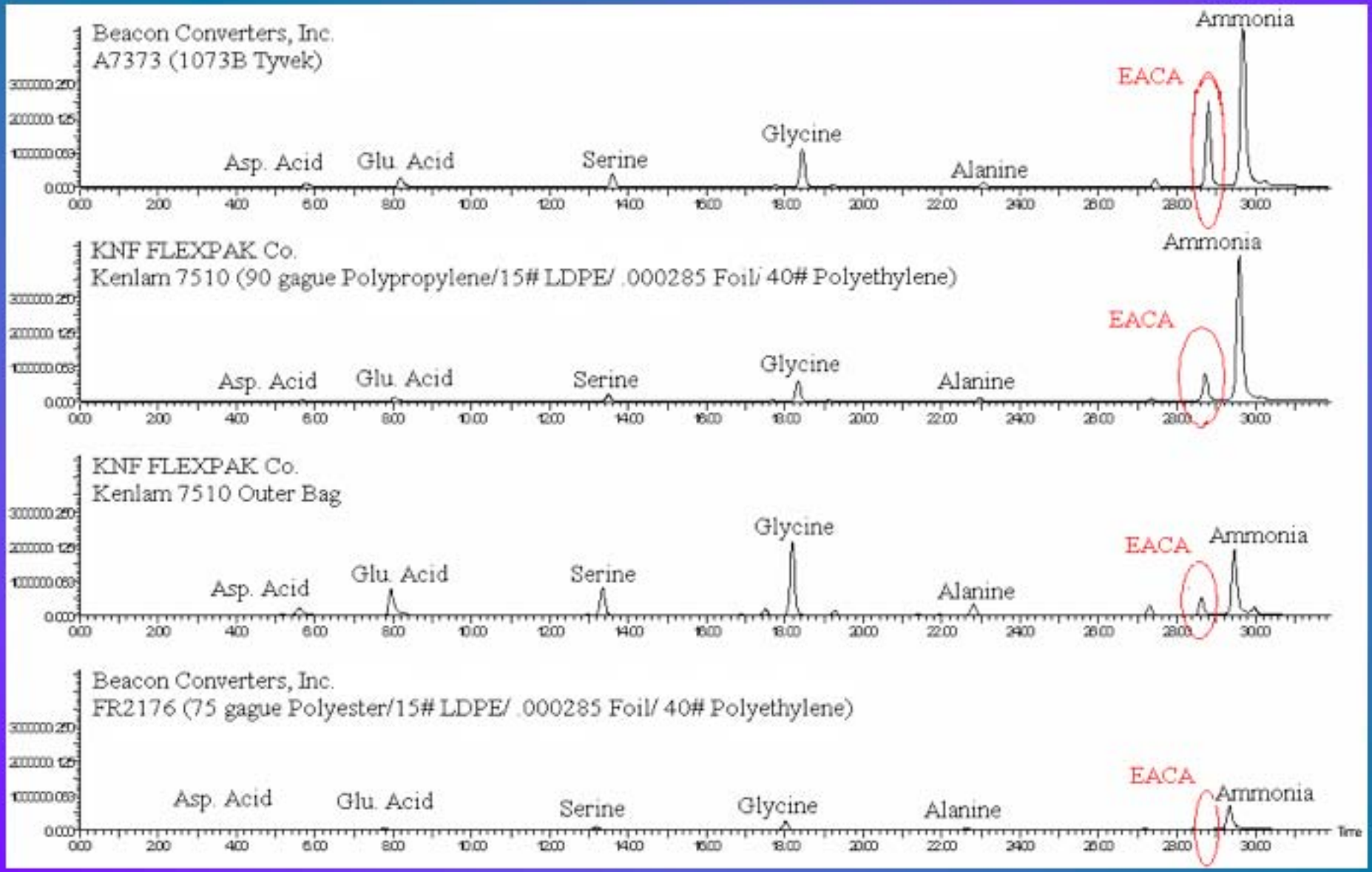
Beacon Converters, Inc.
A7373 (1073B Tyvek)
Asp. Acid
Glu. Acid
Serine
Glycine
Alanine
EACA
Ammonia
KNF FLEXPAK Co.
Kenlam 7510 (90 gague Polypropylene/15# LDPE/ .000285 Foil/ 40# Polyethylene)
Asp. Acid
Glu. Acid
Serine
Glycine
Alanine
EACA
Ammonia
KNF FLEXPAK Co.
Kenlam 7510 Outer Bag
Asp. Acid
Glu. Acid
Serine
Glycine
Alanine
EACA
Ammonia
Beacon Converters, Inc.
FR2176 (75 gague Polyester/15# LDPE/ .000285 Foil/ 40# Polyethylene)
Asp. Acid
Glu. Acid
Serine
Glycine
Alanine
EACA
Ammonia
Time

Results

Bag Type Amino Acid	*Nylon* (pmol)	*KNF OUTER* (pmol)	*KNF FLEXPAK* (pmol)	*A7373* (pmol)	*FR2176* (pmol)
Asp. Acid	< 6	18	< 6	16	< 6
Glu. Acid	< 5	38	8	23	< 5
Serine	4,200	19	< 4	< 4	< 4
Glycine	780	41	3	31	4
β-Ala	< 4	5	< 4	< 4	< 4
GABA +β-AIB	< 4	< 4	< 4	< 4	< 4
Alanine	650	9	< 4	5	< 4
β-ABA	5	< 4	< 4	< 4	< 4
AIB	< 10	< 10	< 10	< 10	< 10
ABA	< 4	< 4	< 4	< 4	< 4
Isovaline	< 20	< 20	< 20	< 20	< 20
Valine	< 4	15	< 4	< 4	< 4
EACA	1,460,000	< 5	41	176	< 5
TOTAL	**1,465,600**	**145**	**52**	**251**	**4**

Summary

- Contamination by EACA is preventable
- How the bag is packaged affects the bag
- FR2176 is a better bag for meteorite collection than the current Nylon bag

Acknowledgements

- Jason Dworkin (Goddard)
- Danny Glavin (Goddard)
- Jamie Elsila-Cook (Goddard)
- Jim Doty and Millie Martin (Goddard)
- Kevin Righter (Johnson Space Center)
- Corinne Eby (Goddard)
- The NASA Astrobiology Internship Program